Purlin Cleat

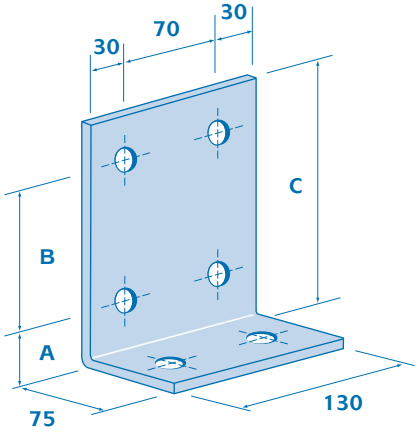

Purlin Cleat - Angle - Boltable				
Ref.	121	140	177	200
Thickness	6	6	6	6
Dimension A	50	50	50	50
Dimension B	40	60	80	116
Dimension C	120	140	160	196
Hole Diameter	18	18	18	18
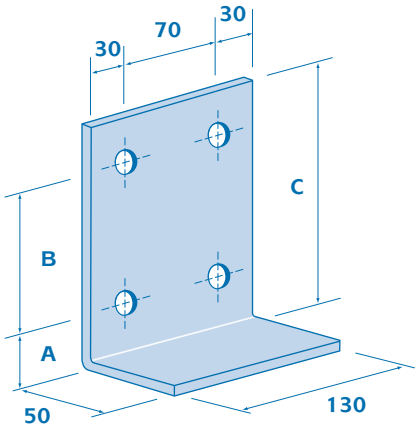
Purlin Cleat - Angle - Weldable				
Ref.	121	140	177	200
Thickness	6	6	6	6
Dimension A	50	50	50	50
Dimension B	40	60	80	116
Dimension C	120	140	160	196
Hole Diameter	18	18	18	18